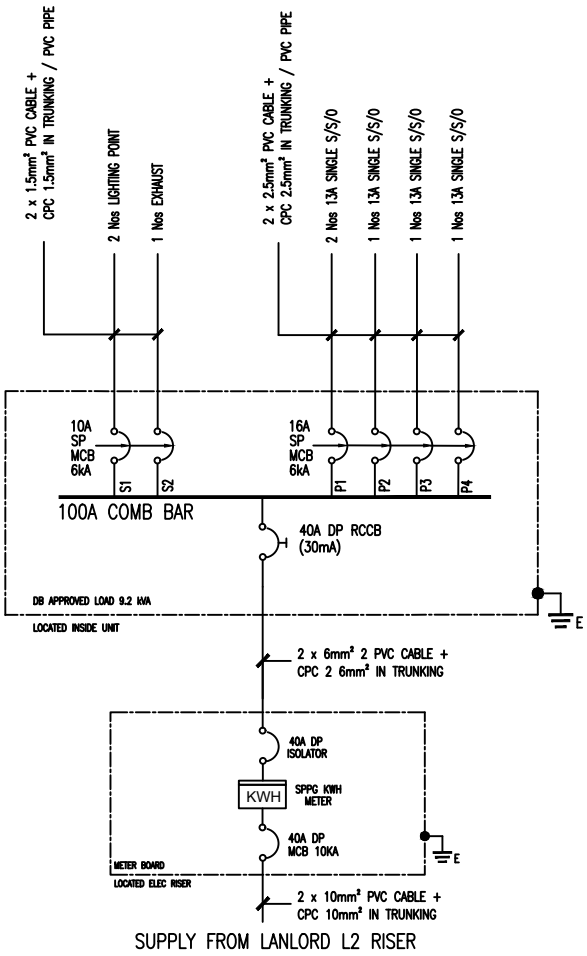

CLIENT / ADDRESS :	MAIN CONTRACTOR :	ELECTRICAL CONTRACTOR :	DRAWING TITLE :	LEW :	CHECKED :	DATE :
HATSU HANA CUPPAGE PLAZA #02-15			SINGLE LINE DIAGRAM (SLD)	EMA LICENSED ELECTRICAL WORKER ELECTRICAL SEOW SWEE LEONG 8/25825 SINGAPORE		14 MAY 2025
					DRAWING NO. : I2R-HAT-CUP-SLD	REV : 0